53769

# Work Order ID 68520

*Thursday, April 14, 2011 1:09:11 PM*



**Item ID:** D350-748-101 **Accept** **Setup Start** **Stop**

**Revision ID:**

**Item Name:** Crosstube Installation, High Fwd

**Start Date:** 4/14/2011 **Start Qty:** 1.00 **Cust Item ID:**

**Required Date:** 5/5/2011 **Req'd Qty:** 1.00 **Customer:**

**Reference:**

**Run Start** **Stop**

**Approvals:** **Process Plan:** // **Date:** 11-04-14 **Tooling:** _____ **Date:** _____

**QC:** _____ **Date:** _____ **SPC (Y/N):** _____ **Date:** _____

| Sequence ID/ Work Center ID | Operation Description | Set Up/ Run Hours | Tool ID | Tool # | Plan Code | Accept Qty | Reject Qty | Reject Number | Insp. Stamp |
|---|---|---|---|---|---|---|---|---|---|
| **Draw Nbr** / **Revision Nbr** | | | | | | | | | |
| D350-748-141 / F | | | | | | | | | |
| 100 | DOCUMENT CONTROL | 0.00 | | | | | | | |
| DC | **Memo** | 0.00 | | | | | | | |
| Document Control | Photocopy bluefile & type labels per PPPD350-748-101 | | CHG002 | | | | | | |
| 110 | BENDING MACHINE - CROSSTUBES | 0.00 | | | | | | | |
| CNC Bend 1 | **Memo** | 0.00 | | | | | | | |
| CNC Delta 100 Bender | Bend tube as per Dwg D350-748-141 using CNC bender program D350F and Folio FT_____ | | | | | | | | |
| 120 | QC15- Crosstube Dimensional Check | 0.00 | | | | | | | |
| QC | **Memo** | 0.00 | | | | | | | |
| Quality Control | | | | | | | | | |

SCRAP

Scrap

Pto →

11-8-3

Dart Aerospace Ltd

| W/O: | | WORK ORDER CHANGES | | | | | |
|---|---|---|---|---|---|---|---|
| DATE | STEP | PROCEDURE CHANGE | By | Date | Qty | Approval Chief Eng / Prod Mgr | Approval QC Inspector |
| | | | | | | | |
| | | | | | | | |

11-808

Part No: D350-748-101 PAR #: N/A Fault Category: ~~Landing Gear~~ Cross tube NCR: (Yes) No DQA: A Date: 11.08.31

Resolution: SCRAP Disposition: SCRAP QA: N/C Closed: CK Date: 11/08/31

| NCR: 68520 | | WORK ORDER NON-CONFORMANCE (NCR) 2887.94 | | | | | | |
|---|---|---|---|---|---|---|---|---|
| DATE | STEP | Description of NC Section A | Corrective Action Section B: Initial Chief Eng | Action Description Chief Eng | Sign & Date | Verification Section C | Approval Chief Eng | Approval QC Inspector |
| 11/8/3 | # 10 | tube is over bent + has A .0.438" twist. Tube is SCRAP. R.C. Process | 11.08.23 CS1042 | SCRAP tube as per Email from David Shepherd on Aug 30 to E. Dawni See Attachment | JW 11-08-30 | 11-08-30 | 11.08.23 CS1042 | 11/08/03 |
| | | | | | | | | |
| | | | | | | | | |

NOTE: Date & initial all entries

H:\fFORMS\Quality Assurance\approved QA\NCRWO RevE

# Work Order ID 68520

*Thursday, April 14, 2011 1:09:11 PM*



**Item ID:** D350-748-101

**Revision ID:**

**Item Name:** Crosstube Installation, High Fwd

**Start Date:** 4/14/2011 **Start Qty:** 1.00

**Required Date:** 5/5/2011 **Req'd Qty:** 1.00

**Reference:**

**Accept**

**Setup** **Start**

**Stop**

**Cust Item ID:**

**Customer:**

**Run** **Start**

**Stop**

**Approvals:** **Process Plan:** _____ **Date:** _____ **Tooling:** _____ **Date:** _____

**QC:** _____ **Date:** _____ **SPC (Y/N):** _____ **Date:** _____

| Sequence ID/ Work Center ID | Operation Description | Set Up/ Run Hours | Tool ID | Tool # | Plan Code | Accept Qty | Reject Qty | Reject Number | Insp. Stamp |
|---|---|---|---|---|---|---|---|---|---|
| 125 | | 0.00 | | | | | | | |
| HandFXtube | **Memo** | 0.00 | | | | | | | |
| Hand Finishing Crosstubes | ***Stress relief***<br>Heat treat crosstube as per QSI010 4.3<br>Temp:_____<br>Start time:_____<br>Finish time:_____ | | | | | | | | |
| 127 | QC6- Inspect dimensions to drawing | 0.00 | | | | | | | |
| QC | **Memo** | 0.00 | | | | | | | |
| Quality Control | | | | | | | | | |

Dart Aerospace Ltd

| W/O: | | WORK ORDER CHANGES | | | | | |
|---|---|---|---|---|---|---|---|
| DATE | STEP | PROCEDURE CHANGE | By | Date | Qty | Approval Chief Eng / Prod Mgr | Approval QC Inspector |
| | | | | | | | |
| | | | | | | | |

**Part No:** _____ **PAR #:** _____ **Fault Category:** _____ **NCR:** Yes No **DQA:** _____ **Date:** _____

**Resolution:** _____ **Disposition:** _____ **QA: N/C Closed:** _____ **Date:** _____

| NCR: | | WORK ORDER NON-CONFORMANCE (NCR) | | | | | | |
|---|---|---|---|---|---|---|---|---|
| DATE | STEP | Description of NC Section A | Corrective Action Section B | | | Verification Section C | Approval Chief Eng | Approval QC Inspector |
| | | | Initial Chief Eng | Action Description Chief Eng | Sign & Date | | | |
| | | | | | | | | |
| | | | | | | | | |
| | | | | | | | | |

**NOTE:** Date & initial all entries

H:\fFORMS\Quality Assurance\approved QA\NCRWO RevE

# Work Order ID 68520

*Thursday, April 14, 2011 1:09:11 PM*

**Item ID:** D350-748-101 **Accept** **Setup Start** **Stop**

**Revision ID:**

**Item Name:** Crosstube Installation, High Fwd

**Start Date:** 4/14/2011 **Start Qty:** 1.00 **Cust Item ID:**

**Required Date:** 5/5/2011 **Req'd Qty:** 1.00 **Customer:**

**Reference:**

**Approvals:** **Process Plan:** _____ **Date:** _____ **Tooling:** _____ **Date:** _____ **Run Start** **Stop**

**QC:** _____ **Date:** _____ **SPC (Y/N):** _____ **Date:** _____

| Sequence ID/ Work Center ID | Operation Description | Set Up/ Run Hours | Tool ID | Tool # | Plan Code | Accept Qty | Reject Qty | Reject Number | Insp. Stamp |
|---|---|---|---|---|---|---|---|---|---|
| 130 | | 0.00 | | | | | | | |
| Crosstubes | Crosstubes | | | | | | | | |
| Crosstubes | **Memo** | 0.00 | | | | | | | |
| | 1-Drill Tube as per Dwg D350-748-141 Using DT8876 A,B &C Drill Jigs, Set-up drill table as per QSI 010<br>2-Deburr<br>3-Engrave Part # and Batch # as per Dwg D350-748-141<br>4-Remove all marks from tube within limits of D350-748-141<br>5- Apply a light coat of LPS3 on the interior of tube<br>Batch:_____ | | | | | | | | |
| 140 | QC5- Inspect part completeness to step on W/O | 0.00 | | | | | | | |
| QC | **Memo** | 0.00 | | | | | | | |
| Quality Control | CHECK 10 DEG HOLES WITH DT8876E (EUROCOPTER CLAMP) | | | | | | | | |

Dart Aerospace Ltd

| W/O: | | WORK ORDER CHANGES | | | | | |
|---|---|---|---|---|---|---|---|
| DATE | STEP | PROCEDURE CHANGE | By | Date | Qty | Approval Chief Eng / Prod Mgr | Approval QC Inspector |
| | | | | | | | |
| | | | | | | | |

**Part No:** _____ **PAR #:** _____ **Fault Category:** _____ **NCR:** Yes No **DQA:** _____ **Date:** _____

**Resolution:** _____ **Disposition:** _____ **QA: N/C Closed:** _____ **Date:** _____

| NCR: | | WORK ORDER NON-CONFORMANCE (NCR) | | | | | | |
|---|---|---|---|---|---|---|---|---|
| DATE | STEP | Description of NC Section A | Corrective Action Section B | | | Verification Section C | Approval Chief Eng | Approval QC Inspector |
| | | | Initial Chief Eng | Action Description Chief Eng | Sign & Date | | | |
| | | | | | | | | |
| | | | | | | | | |
| | | | | | | | | |

**NOTE:** Date & initial all entries

H:\fFORMS\Quality Assurance\approved QA\NCRWO RevE

# Work Order ID 68520

*Thursday, April 14, 2011 1:09:11 PM*

**Item ID:** D350-748-101 **Accept** **Setup Start** **Stop**

**Revision ID:**

**Item Name:** Crosstube Installation, High Fwd

**Start Date:** 4/14/2011 **Start Qty:** 1.00 **Cust Item ID:**

**Required Date:** 5/5/2011 **Req'd Qty:** 1.00 **Customer:**

**Reference:**

**Run Start** **Stop**

**Approvals:** **Process Plan:** _____ **Date:** _____ **Tooling:** _____ **Date:** _____

**QC:** _____ **Date:** _____ **SPC (Y/N):** _____ **Date:** _____

| Sequence ID/ Work Center ID | Operation Description | Set Up/ Run Hours | Tool ID | Tool # | Plan Code | Accept Qty | Reject Qty | Reject Number | Insp. Stamp |
|---|---|---|---|---|---|---|---|---|---|
| 150 | Outsource process-Cadplate per QSI017 4.1.9.1 | 0.00 | | | | | | | |
| Outsource3 | **Memo** | 0.00 | | | | | | | |
| Outsource process - Cad plate | Issue P/O: _____<br>Stress relief at 375° for 5 hours<br>Magnetic Particle Inspect per ASTM E1444<br>Cadium Plate per AMS-QQ-P-416B, Class 1, Type 2<br>Embrittle relief at 375° for 8 hours, Chromate Treat<br>Possibe Supplier: Southwest United Industries<br>Ensure Certificate of Conformity is attached | | | | | | | | |
| 160 | Receive & Inspect for Damage & Mat'l Certs | 0.00 | | | | | | | |
| Packaging | **Memo** | 0.00 | | | | | | | |
| Packaging | Ensure certificate of conformity is attached | | | | | | | | |
| 170 | QC5- Inspect part completeness to step on W/O | 0.00 | | | | | | | |
| QC | **Memo** | 0.00 | | | | | | | |
| Quality Control | | | | | | | | | |

Dart Aerospace Ltd

| W/O: | | WORK ORDER CHANGES | | | | | |
|---|---|---|---|---|---|---|---|
| DATE | STEP | PROCEDURE CHANGE | By | Date | Qty | Approval Chief Eng / Prod Mgr | Approval QC Inspector |
| | | | | | | | |
| | | | | | | | |

**Part No:** _____ **PAR #:** _____ **Fault Category:** _____ **NCR:** Yes No **DQA:** _____ **Date:** _____

**Resolution:** _____ **Disposition:** _____ **QA: N/C Closed:** _____ **Date:** _____

| NCR: | | WORK ORDER NON-CONFORMANCE (NCR) | | | | | | |
|---|---|---|---|---|---|---|---|---|
| DATE | STEP | Description of NC Section A | Corrective Action Section B | | | Verification Section C | Approval Chief Eng | Approval QC Inspector |
| | | | Initial Chief Eng | Action Description Chief Eng | Sign & Date | | | |
| | | | | | | | | |
| | | | | | | | | |
| | | | | | | | | |

**NOTE:** Date & initial all entries

H:\fFORMS\Quality Assurance\approved QA\NCRWO RevE

# Work Order ID 68520

*Thursday, April 14, 2011 1:09:11 PM*

**Item ID:** D350-748-101 **Accept** **Setup Start** **Stop**

**Revision ID:**

**Item Name:** Crosstube Installation, High Fwd

**Start Date:** 4/14/2011 **Start Qty:** 1.00 **Cust Item ID:**

**Required Date:** 5/5/2011 **Req'd Qty:** 1.00 **Customer:**

**Reference:**

**Run Start** **Stop**

**Approvals:** **Process Plan:** _____ **Date:** _____ **Tooling:** _____ **Date:** _____

**QC:** _____ **Date:** _____ **SPC (Y/N):** _____ **Date:** _____

| Sequence ID/ Work Center ID | Operation Description | Set Up/ Run Hours | Tool ID | Tool # | Plan Code | Accept Qty | Reject Qty | Reject Number | Insp. Stamp |
|---|---|---|---|---|---|---|---|---|---|
| 180 | SprayPaint | 0.00 | | | | | | | |
| SprayPaint | **Memo** | 0.00 | | | | | | | |
| Spray Painting | 1-Prime inside crosstube as per QSI 005 4.2<br>2-Prime Outside of Tube as per Dart QSI 005 4.2 | | | | | | | | |
| 190 | QC14- Inspect Spray Paint | 0.00 | | | | | | | |
| QC | **Memo** | 0.00 | | | | | | | |
| Quality Control | Then,Wrap in plastic bag to protect from scratches | | | | | | | | |
| 200 | Crosstubes | 0.00 | | | | | | | |
| Crosstubes | **Memo** | 0.00 | | | | | | | |
| Crosstubes | 1-Install Ground wire Insert,then insert screw and washer<br><br>2-Install Abraision strips as per Dwg D350-748-141 & QSI 035.<br><br>3-Install supports Using Dt8876 as per Dwg D350-748-141,Torque to 60-80 IN-LBS | | | | | | | | |

Dart Aerospace Ltd

| W/O: | | WORK ORDER CHANGES | | | | | |
|---|---|---|---|---|---|---|---|
| DATE | STEP | PROCEDURE CHANGE | By | Date | Qty | Approval Chief Eng / Prod Mgr | Approval QC Inspector |
| | | | | | | | |
| | | | | | | | |

**Part No:** _____ **PAR #:** _____ **Fault Category:** _____ **NCR:** Yes No **DQA:** _____ **Date:** _____

**Resolution:** _____ **Disposition:** _____ **QA: N/C Closed:** _____ **Date:** _____

| NCR: | | WORK ORDER NON-CONFORMANCE (NCR) | | | | | | |
|---|---|---|---|---|---|---|---|---|
| DATE | STEP | Description of NC Section A | Corrective Action Section B | | | Verification Section C | Approval Chief Eng | Approval QC Inspector |
| | | | Initial Chief Eng | Action Description Chief Eng | Sign & Date | | | |
| | | | | | | | | |
| | | | | | | | | |
| | | | | | | | | |

**NOTE:** Date & initial all entries

H:\fFORMS\Quality Assurance\approved QA\NCRWO RevE

# Work Order ID 68520

*Thursday, April 14, 2011 1:09:11 PM*

**Item ID:** D350-748-101

**Revision ID:**

**Item Name:** Crosstube Installation, High Fwd

**Start Date:** 4/14/2011 **Start Qty:** 1.00

**Required Date:** 5/5/2011 **Req'd Qty:** 1.00

**Reference:**

**Accept**

**Setup Start**

**Stop**

**Cust Item ID:**

**Customer:**

**Run Start**

**Stop**

**Approvals:** **Process Plan:** _____ **Date:** _____ **Tooling:** _____ **Date:** _____

**QC:** _____ **Date:** _____ **SPC (Y/N):** _____ **Date:** _____

| Sequence ID/ Work Center ID | Operation Description | Set Up/ Run Hours | Tool ID | Tool # | Plan Code | Accept Qty | Reject Qty | Reject Number | Insp. Stamp |
|---|---|---|---|---|---|---|---|---|---|
| 210 | QC5- Inspect part completeness to step on W/O | 0.00 | | | | | | | |
| QC | Memo | 0.00 | | | | | | | |
| Quality Control | | | | | | | | | |
| 220 | Pick Kit | 0.00 | | | | | | | |
| Packaging | Memo | 0.00 | | | | | | | |
| Packaging | | | | | | | | | |
| 230 | QC4- 100% Inspect kits for completeness | 0.00 | | | | | | | |
| QC | Memo | 0.00 | | | | | | | |
| Quality Control | | | | | | | | | |

Dart Aerospace Ltd

| W/O: | | WORK ORDER CHANGES | | | | | |
|---|---|---|---|---|---|---|---|
| DATE | STEP | PROCEDURE CHANGE | By | Date | Qty | Approval Chief Eng / Prod Mgr | Approval QC Inspector |
| | | | | | | | |
| | | | | | | | |

**Part No:** _____ **PAR #:** _____ **Fault Category:** _____ **NCR:** Yes No **DQA:** _____ **Date:** _____

**Resolution:** _____ **Disposition:** _____ **QA: N/C Closed:** _____ **Date:** _____

| NCR: | | WORK ORDER NON-CONFORMANCE (NCR) | | | | | | |
|---|---|---|---|---|---|---|---|---|
| DATE | STEP | Description of NC Section A | Corrective Action Section B | | | Verification Section C | Approval Chief Eng | Approval QC Inspector |
| | | | Initial Chief Eng | Action Description Chief Eng | Sign & Date | | | |
| | | | | | | | | |
| | | | | | | | | |
| | | | | | | | | |

**NOTE:** Date & initial all entries

H:\fFORMS\Quality Assurance\approved QA\NCRWO RevE

# Work Order ID 68520

*Thursday, April 14, 2011 1:09:11 PM*

**Item ID:** D350-748-101 **Accept** **Setup** **Start** **Stop**

**Revision ID:**

**Item Name:** Crosstube Installation, High Fwd

**Start Date:** 4/14/2011 **Start Qty:** 1.00 **Cust Item ID:**

**Required Date:** 5/5/2011 **Req'd Qty:** 1.00 **Customer:**

**Reference:**

**Run** **Start** **Stop**

**Approvals:** **Process Plan:** _____ **Date:** _____ **Tooling:** _____ **Date:** _____

**QC:** _____ **Date:** _____ **SPC (Y/N):** _____ **Date:** _____

| Sequence ID/ Work Center ID | Operation Description | Set Up/ Run Hours | Tool ID | Tool # | Plan Code | Accept Qty | Reject Qty | Reject Number | Insp. Stamp |
|---|---|---|---|---|---|---|---|---|---|
| 240 | | 0.00 | | | | | | | |
| Packaging | Packaging | | | | | | | | |
| Packaging | **Memo** | 0.00 | | | | | | | |
| Packaging | Identify and pack for shipping as per PPP D350-748-101<br>Location:_____<br>PPP Rev:_____ | | | | | | | | |
| 250 | QC21- Final Inspection - Work Order Release | 0.00 | | | | | | | |
| QC | **Memo** | 0.00 | | | | | | | |
| Quality Control | | | | | | | | | |

11-08-31

Dart Aerospace Ltd

| W/O: | | WORK ORDER CHANGES | | | | | |
|---|---|---|---|---|---|---|---|
| DATE | STEP | PROCEDURE CHANGE | By | Date | Qty | Approval Chief Eng / Prod Mgr | Approval QC Inspector |
| | | | | | | | |
| | | | | | | | |

**Part No:** _____ **PAR #:** _____ **Fault Category:** _____ **NCR:** Yes No **DQA:** _____ **Date:** _____

**Resolution:** _____ **Disposition:** _____ **QA: N/C Closed:** _____ **Date:** _____

| NCR: | | WORK ORDER NON-CONFORMANCE (NCR) | | | | | | |
|---|---|---|---|---|---|---|---|---|
| DATE | STEP | Description of NC Section A | Corrective Action Section B | | | Verification Section C | Approval Chief Eng | Approval QC Inspector |
| | | | Initial Chief Eng | Action Description Chief Eng | Sign & Date | | | |
| | | | | | | | | |
| | | | | | | | | |
| | | | | | | | | |

**NOTE:** Date & initial all entries

H:\fFORMS\Quality Assurance\approved QA\NCRWO RevE

# Picklist Print

*Thursday, April 14, 2011 1:09:17 PM*



**Work Order ID:** 68520

**Parent Item:** D350-748-101

**Parent Item Name:** Crosstube Installation, High Fwd

**Start Date:** 4/14/2011 **Required Date:** 5/5/2011

**Start Qty:** 1.00 **Required Qty:** 1.00

**Comments:**
IPP Rev:A New Issue 06-07-05 JLM
IPP Rev:B Update qty of MS21042L5 06-09-12 KJ
IPP Rev:C Rev B 07-11-15 DD
IPP Rev D Combined manufacturing 08.04.02 EC verified by: DD
IPP Rev:E 08-06-24 revD as per dwg DD verified by:EC IPP Rev:F
10.08.04 added QSI010 4.3 DD verf:EC

| Component Item ID/ Item Name | Replacement Item ID | Mfg/ Purch | Bin Item | Primary Location | Last Location | Route Seq ID | Unit of Measure | Qty on Hand | Qty per Kit | Total Qty | Qty Issued | Date Issued | Status |
|---|---|---|---|---|---|---|---|---|---|---|---|---|---|
| D350-748-141TRN<br>Crosstube Turning Detail | | Manufactured | No | B68819 | | 110 | Each | 1.0000 | 1 | 1 | 1 | 11-08-03 | JW |
| | | | | **Location** | | | **Loc Qty** | | **Loc Code** | | | | |
| | | | | LG046 | | | 1 | | | | | | |
| | | | | | 64475 | | 1 | | | | | | |
| ALS4-1032-225<br>Insert | | Purchased | No | | | 200 | Each | 1,159.000 | 1 | 1 | | | |
| | | | | **Location** | | | **Loc Qty** | | **Loc Code** | | | | |
| | | | | FP-B | | | 86 | | | | | | |
| | | | | | 110768 | | 86 | | | | | | |
| | | | | ST282 | | | 1073 | | | | | | |
| | | | | | 110768 | | 1073 | | | | | | |
| AN960JD10<br>Washer | NAS1149D0363J | Purchased | No | | | 200 | Each | 0.0000 | 1 | 1 | | | |

Dart Aerospace Ltd

| W/O: | | WORK ORDER CHANGES | | | | | |
|---|---|---|---|---|---|---|---|
| DATE | STEP | PROCEDURE CHANGE | By | Date | Qty | Approval Chief Eng / Prod Mgr | Approval QC Inspector |
| | | | | | | | |
| | | | | | | | |

**Part No:** _____ **PAR #:** _____ **Fault Category:** _____ **NCR:** Yes No **DQA:** _____ **Date:** _____

**Resolution:** _____ **Disposition:** _____ **QA: N/C Closed:** _____ **Date:** _____

| NCR: | | WORK ORDER NON-CONFORMANCE (NCR) | | | | | | |
|---|---|---|---|---|---|---|---|---|
| DATE | STEP | Description of NC Section A | Corrective Action Section B | | | Verification Section C | Approval Chief Eng | Approval QC Inspector |
| | | | Initial Chief Eng | Action Description Chief Eng | Sign & Date | | | |
| | | | | | | | | |
| | | | | | | | | |
| | | | | | | | | |

**NOTE:** Date & initial all entries

H:\fFORMS\Quality Assurance\approved QA\NCRWO RevE

# Picklist Print

*Thursday, April 14, 2011 1:09:17 PM*

**Work Order ID:** 68520

**Parent Item:** D350-748-101

**Parent Item Name:** Crosstube Installation, High Fwd

**Start Date:** 4/14/2011 **Required Date:** 5/5/2011

**Start Qty:** 1.00 **Required Qty:** 1.00

| | | | | | | | | |
|---|---|---|---|---|---|---|---|---|
| D2856-400 | Manufactured | No | 200 | f | 231.0696 | 1.181 | 1.243158 | |
| Abraison Strip | | | | | | | | |

| Location | Loc Qty | Loc Code |
|---|---|---|
| ST403 | 216 | |
| 68076 | 216 | |
| ST409 | 15.0696 | |
| 63735 | 15.0696 | |

| | | | | | | | |
|---|---|---|---|---|---|---|---|
| D3502-1 | Manufactured | No | 200 | Each | 31.0000 | 2 | 2 |
| Support | | | | | | | |

| Location | Loc Qty | Loc Code |
|---|---|---|
| ST063 | 31 | |
| 61206 | 12 | |
| 61843 | 9 | |
| 64004 | 10 | |

| | | | | | | | |
|---|---|---|---|---|---|---|---|
| MS21920-20 | Purchased | No | 200 | Each | 72.0000 | 2 | 2 |
| Clamp (per MIL-DTL-8783C) | | | | | | | |

| Location | Loc Qty | Loc Code |
|---|---|---|
| LG050 | 72 | |
| 116799 | 22 | |
| 117279 | 50 | |

| | | | | | | | |
|---|---|---|---|---|---|---|---|
| MS27039-1-10 | Purchased | No | 200 | Each | 80.0000 | 1 | 1 |
| Screw | | | | | | | |

| Location | Loc Qty | Loc Code |
|---|---|---|
| ST291 | 80 | |
| 115935 | 80 | |

Dart Aerospace Ltd

| W/O: | | WORK ORDER CHANGES | | | | | |
|---|---|---|---|---|---|---|---|
| DATE | STEP | PROCEDURE CHANGE | By | Date | Qty | Approval Chief Eng / Prod Mgr | Approval QC Inspector |
| | | | | | | | |
| | | | | | | | |

**Part No:** _____ **PAR #:** _____ **Fault Category:** _____ **NCR:** Yes No **DQA:** _____ **Date:** _____

**Resolution:** _____ **Disposition:** _____ **QA: N/C Closed:** _____ **Date:** _____

| NCR: | | WORK ORDER NON-CONFORMANCE (NCR) | | | | | | |
|---|---|---|---|---|---|---|---|---|
| DATE | STEP | Description of NC Section A | Corrective Action Section B | | | Verification Section C | Approval Chief Eng | Approval QC Inspector |
| | | | Initial Chief Eng | Action Description Chief Eng | Sign & Date | | | |
| | | | | | | | | |
| | | | | | | | | |
| | | | | | | | | |

**NOTE:** Date & initial all entries

H:\fFORMS\Quality Assurance\approved QA\NCRWO RevE

# Picklist Print

*Thursday, April 14, 2011 1:09:18 PM*

**Work Order ID:** 68520

**Parent Item:** D350-748-101

**Parent Item Name:** Crosstube Installation, High Fwd

**Start Date:** 4/14/2011 **Required Date:** 5/5/2011

**Start Qty:** 1.00 **Required Qty:** 1.00

| | | | | | | | | | |
|---|---|---|---|---|---|---|---|---|---|
| AN4-41A | | Purchased | No | 220 | Each | 198.0000 | 8 | 8 | |
| Bolt | | | | | | | | | |
| | | | **Location** | | **Loc Qty** | **Loc Code** | | | |
| | | | ST360 | | 198 | | | | |
| | | | | 115108 | 98 | | | | |
| | | | | 115705 | 50 | | | | |
| | | | | 116191 | 50 | | | | |
| AN4-6A | | Purchased | No | 220 | Each | 1,071.000 | 16 | 16 | |
| Bolt | | | | | | | | | |
| | | | **Location** | | **Loc Qty** | **Loc Code** | | | |
| | | | ST356 | | 1071 | | | | |
| | | | | 115936 | 200 | | | | |
| | | | | 116191 | 71 | | | | |
| | | | | 116400 | 400 | | | | |
| | | | | 116924 | 400 | | | | |
| AN5-32A | | Purchased | No | 220 | Each | 137.0000 | 4 | 4 | |
| Bolt | | | | | | | | | |
| | | | **Location** | | **Loc Qty** | **Loc Code** | | | |
| | | | ST340 | | 137 | | | | |
| | | | | 115108 | 27 | | | | |
| | | | | 115589 | 60 | | | | |
| | | | | 117161 | 50 | | | | |
| AN960JD416 | NAS1149D0463J | Purchased | No | 220 | Each | 0.0000 | 32 | 32 | |
| Washer | | | | | | | | | |
| AN960JD516 | NAS1149D0563J | Purchased | No | 220 | Each | 0.0000 | 8 | 8 | |
| Washer | | | | | | | | | |

Dart Aerospace Ltd

| W/O: | | WORK ORDER CHANGES | | | | | |
|---|---|---|---|---|---|---|---|
| DATE | STEP | PROCEDURE CHANGE | By | Date | Qty | Approval Chief Eng / Prod Mgr | Approval QC Inspector |
| | | | | | | | |
| | | | | | | | |

**Part No:** _____ **PAR #:** _____ **Fault Category:** _____ **NCR:** Yes No **DQA:** _____ **Date:** _____

**Resolution:** _____ **Disposition:** _____ **QA: N/C Closed:** _____ **Date:** _____

| NCR: | | WORK ORDER NON-CONFORMANCE (NCR) | | | | | | |
|---|---|---|---|---|---|---|---|---|
| DATE | STEP | Description of NC Section A | Corrective Action Section B | | | Verification Section C | Approval Chief Eng | Approval QC Inspector |
| | | | Initial Chief Eng | Action Description Chief Eng | Sign & Date | | | |
| | | | | | | | | |
| | | | | | | | | |
| | | | | | | | | |

**NOTE:** Date & initial all entries

H:\fFORMS\Quality Assurance\approved QA\NCRWO RevE

# Picklist Print

*Thursday, April 14, 2011 1:09:18 PM*

**Work Order ID:** 68520

**Parent Item:** D350-748-101

**Parent Item Name:** Crosstube Installation, High Fwd

**Start Date:** 4/14/2011 **Required Date:** 5/5/2011

**Start Qty:** 1.00 **Required Qty:** 1.00

| | | | | | | | | |
|---|---|---|---|---|---|---|---|---|
| D3500-1<br>Saddle | Manufactured | No | | 220 | Each | 35.0000 | 4 | 4 |

| Location | | Loc Qty | Loc Code |
|---|---|---|---|
| ST424/25 | | 20 | |
| | 62207 | 20 | |
| ST425 | | 15 | |
| | 61838 | 15 | |

| | | | | | | | | |
|---|---|---|---|---|---|---|---|---|
| D3501-1<br>Bushing | Manufactured | No | | 220 | Each | 67.0000 | 16 | 16 |

| Location | | Loc Qty | Loc Code |
|---|---|---|---|
| ST063 | | 67 | |
| | 61984 | 67 | |

| | | | | | | | | |
|---|---|---|---|---|---|---|---|---|
| MS21042L4<br>Nut | Purchased | No | | 220 | Each | 2,670.000 | 24 | 24 |

| Location | | Loc Qty | Loc Code |
|---|---|---|---|
| ST300 | | 2670 | |
| | 116188 | 670 | |
| | 116823 | 2000 | |

| | | | | | | | | |
|---|---|---|---|---|---|---|---|---|
| MS21042L5<br>Nut | Purchased | No | | 220 | Each | 765.0000 | 4 | 4 |

| Location | | Loc Qty | Loc Code |
|---|---|---|---|
| ST300 | | 765 | |
| | 115594 | 5 | |
| | 116105 | 500 | |
| | 116548 | 260 | |

Dart Aerospace Ltd

| W/O: | | WORK ORDER CHANGES | | | | | |
|---|---|---|---|---|---|---|---|
| DATE | STEP | PROCEDURE CHANGE | By | Date | Qty | Approval Chief Eng / Prod Mgr | Approval QC Inspector |
| | | | | | | | |
| | | | | | | | |

**Part No:** _____ **PAR #:** _____ **Fault Category:** _____ **NCR:** Yes No **DQA:** _____ **Date:** _____

**Resolution:** _____ **Disposition:** _____ **QA: N/C Closed:** _____ **Date:** _____

| NCR: | | WORK ORDER NON-CONFORMANCE (NCR) | | | | | | |
|---|---|---|---|---|---|---|---|---|
| DATE | STEP | Description of NC Section A | Corrective Action Section B | | | Verification Section C | Approval Chief Eng | Approval QC Inspector |
| | | | Initial Chief Eng | Action Description Chief Eng | Sign & Date | | | |
| | | | | | | | | |
| | | | | | | | | |
| | | | | | | | | |

**NOTE:** Date & initial all entries

H:\fFORMS\Quality Assurance\approved QA\NCRWO RevE

| DART AEROSPACE LTD | Work Order: | 68520 |
|---|---|---|
| | | |
| **Description:** Crosstube High Fwd (AS350/355) | **Part Number:** | **D350-748-101** |
| | | |
| **Inspection Dwg:** D350-748-141 **Rev:** E | | **Page 1 of 1** |

| Required Dimension | Min | Max |
|---|---|---|
| Height | 23.13 | 23.37 |
| 1/2 Span | 40.78 | 41.02 |
| Angle | 75 | 77 |
| Total Span | 81.56 | 82.04 |

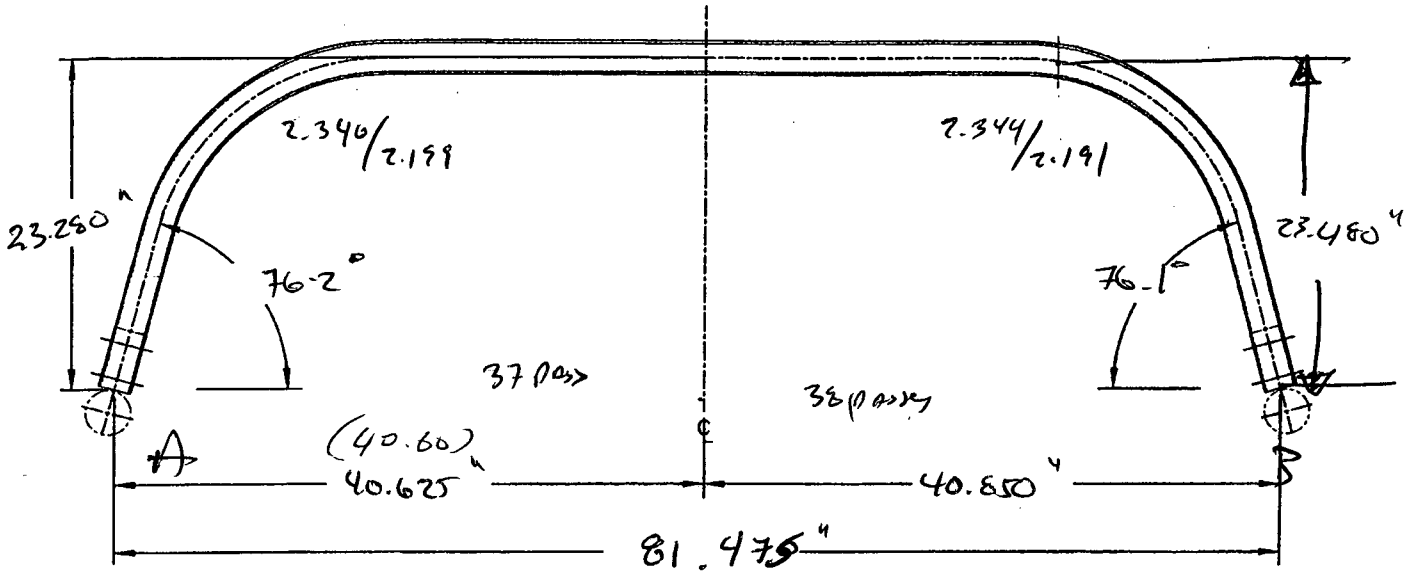


| Comments |
|---|
| twist @ 4.38 |
| Side A = 3.1% crushing @ 37 passes |
| Side B = 3.3% crushing @ 38 passes |
| |

| QC15 Inspection | |
|---|---|
| Date | |

| Rev | Date | Change | Revised by | Approved |
|---|---|---|---|---|
| A | 07.02.06 | New Issue | KJ/JM | |
| B | 10.08.23 | Dwg Rev updated | KJ | 10.08.23 |

Dart Aerospace Ltd

| W/O: | | WORK ORDER CHANGES | | | | | |
|---|---|---|---|---|---|---|---|
| DATE | STEP | PROCEDURE CHANGE | By | Date | Qty | Approval Chief Eng / Prod Mgr | Approval QC Inspector |
| | | | | | | | |
| | | | | | | | |

**Part No:** _____ **PAR #:** _____ **Fault Category:** _____ **NCR:** Yes No **DQA:** _____ **Date:** _____

**Resolution:** _____ **Disposition:** _____ **QA: N/C Closed:** _____ **Date:** _____

| NCR: | | WORK ORDER NON-CONFORMANCE (NCR) | | | | | | |
|---|---|---|---|---|---|---|---|---|
| DATE | STEP | Description of NC Section A | Corrective Action Section B | | | Verification Section C | Approval Chief Eng | Approval QC Inspector |
| | | | Initial Chief Eng | Action Description Chief Eng | Sign & Date | | | |
| | | | | | | | | |
| | | | | | | | | |
| | | | | | | | | |

**NOTE:** Date & initial all entries

| Item | Qty -141 | Part Number | Description |
|---|---|---|---|
| 1 | X | D350-748-141 | CROSSTUBE ASSEMBLY (AS 350/355 HI FWD) |
| 2 | 1 | D6015-125 | CROSSTUBE (OR D6017-115) |
| 3 | 2 | D3502-1 | SUPPORT |
| 4 | 2 | D2856-400-710 | ABRASION STRIP |
| 5 | 1 | AELS-1032-225 | INSERT |
| 6 | 1 | NAS1149D0363J | WASHER (OR AN960JD10) |
| 7 | 2 | MS21920-20 | CLAMP (PER DART SPEC. M-MS21920-20) |
| 8 | 1 | MS27039-1-10 | SCREW |

**GENERAL NOTES:**

1) MATERIAL: MANUFACTURED FROM D6015-125 OR D6017-115
   FINISHED LENGTH = 110.270±0.06
2) FINISH: MAGNETIC PARTICLE INSPECT PER DART QSI 038 4.2
   CADMIUM PLATE PER AMS-QQ-P-416B, CLASS 1, TYPE II
   PRIME INSIDE AND OUTSIDE PER DART QSI 005 4.2
   PAINT OUTSIDE PER DART QSI 005 4.2
3) TOLERANCES ARE PER DART QSI 018 UNLESS OTHERWISE NOTED.
4) UNITS: INCHES UNLESS OTHERWISE NOTED.
5) BREAK SHARP EDGES: 0.005 TO 0.010 MAX.
6) IDENTIFICATION: DART PART NUMBER "D350-748-141" AND BATCH NUMBER ON INSIDE OF CUFF
   PER DART QSI 044 6.4 (VIBRATING STYLUS)
7) WEIGHT: 30.45 lbs
8) PART IS SYMMETRIC ABOUT CENTERLINE, EXCEPT FOR Ø0.297 HOLE.
9) BLEND OUT ALL EDGES FROM MACHINING LONGITUDINALY, TRANSITION SHOULD BE SMOOTH.
   NOTE: ALL HOLES ARE DRILLED AFTER BENDING.
10) BEND PROGRESSIVELY WITH A MINIMUM OF 7 PASSES. MAXIMUM TUBE FLATTENING DUE TO BENDING IS 6% BASED ON O.D.
11) HEAT TREAT TO MIN. 180 KSI PER MIL-T-6736 OR AMS 2759-1C AFTER TURNING. ACCEPTABLE TO VERIFY TENSILE STRENGTH BY HARDNESS TEST PER ASTM E18 TO 40-45 HRC.
12) INSTALL D2856-400-710 ABRASION STRIPS WITH A GAP ON BOTTOM SIDE OF CROSSTUBE, CENTERED OPPOSITE D3502-1 SUPPORT, PER QSI 035.
13) EXTREME CARE MUST BE TAKEN TO PROTECT THE OUTSIDE SURFACE OF THE TUBE. THE OUTSIDE SURFACE MUST BE SMOOTH AND FREE FROM SURFACE DEFECTS SUCH AS SCRATCHES, NICKS, OR DENTS. DEFECTS UP TO 0.005" MAY BE BLENDED OUT LONGITUDINALLY. CIRCUMFERENTIAL GRIND MARKS ARE UNACCEPTABLE. WHEN DRILLING HOLES EXTREME CARE MUST BE TAKEN AND CAREFUL DEBURRING PERFORMED TO ENSURE A CLEAN HOLE WITH NO CRACKING/CHIPPING/GROOVES.
14) TORQUE CLAMPS 60 TO 80 IN-LB. ENSURE AT LEAST 1.5 THREADS SHOWING IN SAFETY AND THAT NUT HAS NOT BOTTOMED-OUT AFTER TORQUING.
15) MAX TWIST AFTER BENDING: WITH XTUBE LAYED FLAT ON SURFACE, THE DIFFERENCE BETWEEN CUFF HEIGHTS FROM THE SURFACE MAY BE NO LARGER THAN 0.25 (ZN C1-3).

SHOP COPY
RETURN TO
ENGINEERING
UNCONTROLLED COPY
SUBJECT TO AMENDMENT
WITHOUT NOTICE
WORK ORDER
NO. 68520
11-04-14

RELEASED
2011-01-18

| REV. | DESCRIPTION | BY | DATE |
|---|---|---|---|
| F | ADD HRC TEST OPTION (B8-1) PER PAR 09-040, ADD TWIST LIMIT (A8-1, C1-3), ADD D6015-125 OPTION (C8-1), STOCK DIM NOW MACHINED (D1-4) | CP | 10.11.23 |
| E | REVISE GENERAL NOTES; UPDATE TO CURRENT ADD STANDARDS; RELOCATED FLAG #6 PER PAR 08-046 (ZN A6-3); TOLERANCES (ZN C6-3, D1-3) | RF | 09.09.30 |
| D | MAG. PARTICLE AND CAD PLATE AS MFD. | CP | 06.10.31 |
| C | ADD CAD PLATING | CP | 06.08.14 |
| B | ADD D6017-115 & PRIME AND PAINT | CP | 06.06.30 |
| A | NEW ISSUE | CP | 06.03.31 |

| | | |
|---|---|---|
| DESIGN | | **DART AEROSPACE LTD** HAWKESBURY, ONTARIO, CANADA |
| DRAWN | | |
| CHECKED | | DRAWING NO. D350-748-141 — REV. F — SHEET 1 OF 4 |
| MFG. APPR. | | |
| APPROVED | | TITLE: CROSSTUBE (AS 350/355 HI FWD) — SCALE: NTS |
| DE APPR. | | |
| DATE | 10.11.23 | |

COPYRIGHT © 2006 BY DART AEROSPACE LTD
THIS DOCUMENT IS PRIVATE AND CONFIDENTIAL AND IS SUPPLIED ON THE EXPRESS CONDITION THAT IT IS NOT TO BE USED FOR ANY PURPOSE OR COPIED OR COMMUNICATED TO ANY OTHER PERSON WITHOUT WRITTEN PERMISSION FROM DART AEROSPACE LTD.

Dart Aerospace Ltd

| W/O: | | WORK ORDER CHANGES | | | | | |
|---|---|---|---|---|---|---|---|
| DATE | STEP | PROCEDURE CHANGE | By | Date | Qty | Approval Chief Eng / Prod Mgr | Approval QC Inspector |
| | | | | | | | |
| | | | | | | | |

**Part No:** _____ **PAR #:** _____ **Fault Category:** _____ **NCR:** Yes No **DQA:** _____ **Date:** _____

**Resolution:** _____ **Disposition:** _____ **QA: N/C Closed:** _____ **Date:** _____

| NCR: | | WORK ORDER NON-CONFORMANCE (NCR) | | | | | | |
|---|---|---|---|---|---|---|---|---|
| DATE | STEP | Description of NC Section A | Corrective Action Section B | | | Verification Section C | Approval Chief Eng | Approval QC Inspector |
| | | | Initial Chief Eng | Action Description Chief Eng | Sign & Date | | | |
| | | | | | | | | |
| | | | | | | | | |
| | | | | | | | | |

**NOTE:** Date & initial all entries

H:\fFORMS\Quality Assurance\approved QA\NCRWO RevE

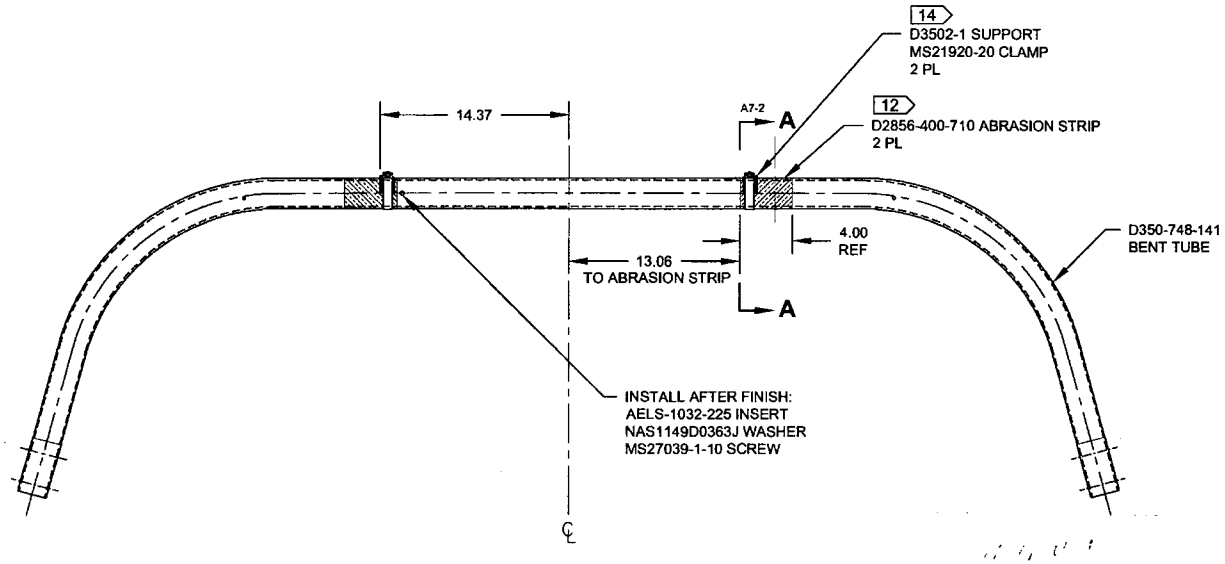


**D350-748-141**
**ASSEMBLY DETAIL**

wb 68520

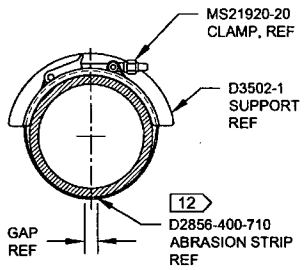


**SECTION A-A** D4-2
SCALE 4X

RELEASED
2011 -01- 28

| | | | |
|---|---|---|---|
| DESIGN | | **DART AEROSPACE LTD** HAWKESBURY, ONTARIO, CANADA | |
| DRAWN | | | |
| CHECKED | | DRAWING NO. | REV. F |
| MFG. APPR. | | D350-748-141 | SHEET 2 OF 4 |
| APPROVED | | TITLE | SCALE |
| DE APPR. | | CROSSTUBE (AS 350/355 HI FWD) | NTS |
| DATE | 10.11.23 | | |

COPYRIGHT © 2006 BY DART AEROSPACE LTD
THIS DOCUMENT IS PRIVATE AND CONFIDENTIAL AND IS SUPPLIED ON THE EXPRESS CONDITION THAT IT IS NOT TO BE USED FOR ANY PURPOSE OR COPIED OR COMMUNICATED TO ANY OTHER PERSON WITHOUT WRITTEN PERMISSION FROM DART AEROSPACE LTD.

Dart Aerospace Ltd

| W/O: | | WORK ORDER CHANGES | | | | | |
|---|---|---|---|---|---|---|---|
| DATE | STEP | PROCEDURE CHANGE | By | Date | Qty | Approval Chief Eng / Prod Mgr | Approval QC Inspector |
| | | | | | | | |
| | | | | | | | |

**Part No:** _____ **PAR #:** _____ **Fault Category:** _____ **NCR:** Yes No **DQA:** _____ **Date:** _____

**Resolution:** _____ **Disposition:** _____ **QA: N/C Closed:** _____ **Date:** _____

| NCR: | | WORK ORDER NON-CONFORMANCE (NCR) | | | | | | |
|---|---|---|---|---|---|---|---|---|
| DATE | STEP | Description of NC Section A | Corrective Action Section B | | | Verification Section C | Approval Chief Eng | Approval QC Inspector |
| | | | Initial Chief Eng | Action Description Chief Eng | Sign & Date | | | |
| | | | | | | | | |
| | | | | | | | | |
| | | | | | | | | |

**NOTE:** Date & initial all entries

H:\fFORMS\Quality Assurance\approved QA\NCRWO RevE

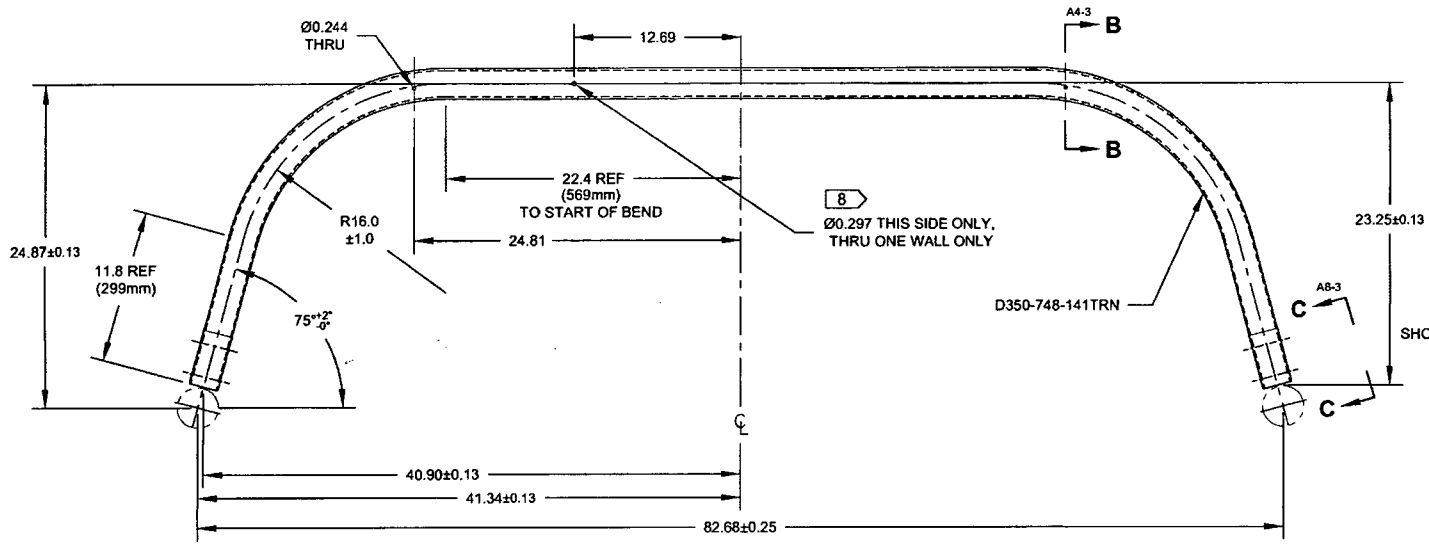


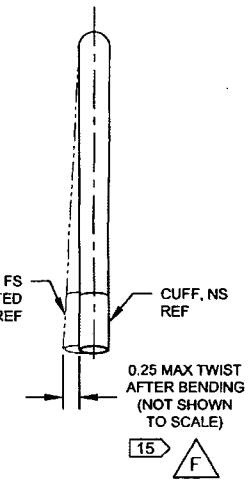


**D350-748-141**
**BENDING AND DRILLING DETAIL** 10

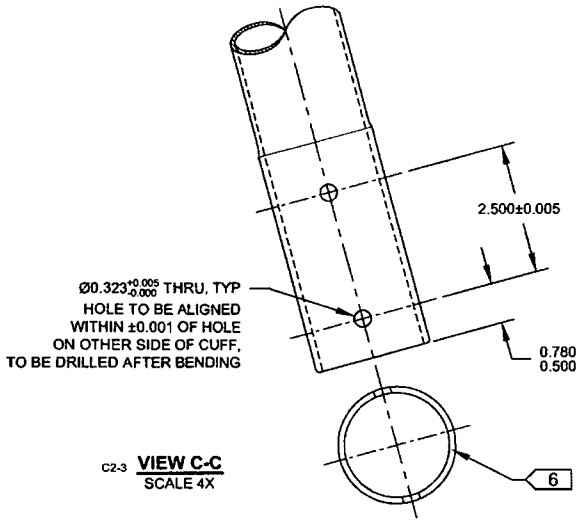


C2-3 **VIEW C-C**
SCALE 4X

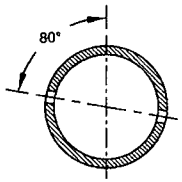


**SECTION B-B** D3-3
SCALE 4X

wo 68520

RELEASED
2011-01-18

| | | | |
|---|---|---|---|
| DESIGN | | **DART AEROSPACE LTD** HAWKESBURY, ONTARIO, CANADA | |
| DRAWN | | DRAWING NO. | REV. F |
| CHECKED | | D350-748-141 | SHEET 3 OF 4 |
| MFG. APPR. | | TITLE | SCALE |
| APPROVED | | CROSSTUBE (AS 350/355 HI FWD) | NTS |
| DE APPR. | | | |
| DATE | 10.11.23 | | |

COPYRIGHT © 2005 BY DART AEROSPACE LTD
THIS DOCUMENT IS PRIVATE AND CONFIDENTIAL AND IS SUPPLIED ON THE EXPRESS CONDITION THAT IT IS NOT TO BE USED FOR ANY PURPOSE OR COPIED OR COMMUNICATED TO ANY OTHER PERSON WITHOUT WRITTEN PERMISSION FROM DART AEROSPACE LTD.

Dart Aerospace Ltd

| W/O: | | WORK ORDER CHANGES | | | | | |
|---|---|---|---|---|---|---|---|
| DATE | STEP | PROCEDURE CHANGE | By | Date | Qty | Approval Chief Eng / Prod Mgr | Approval QC Inspector |
| | | | | | | | |
| | | | | | | | |

**Part No:** _____ **PAR #:** _____ **Fault Category:** _____ **NCR:** Yes No **DQA:** _____ **Date:** _____

**Resolution:** _____ **Disposition:** _____ **QA: N/C Closed:** _____ **Date:** _____

| NCR: | | WORK ORDER NON-CONFORMANCE (NCR) | | | | | | |
|---|---|---|---|---|---|---|---|---|
| DATE | STEP | Description of NC Section A | Corrective Action Section B | | | Verification Section C | Approval Chief Eng | Approval QC Inspector |
| | | | Initial Chief Eng | Action Description Chief Eng | Sign & Date | | | |
| | | | | | | | | |
| | | | | | | | | |
| | | | | | | | | |

**NOTE:** Date & initial all entries

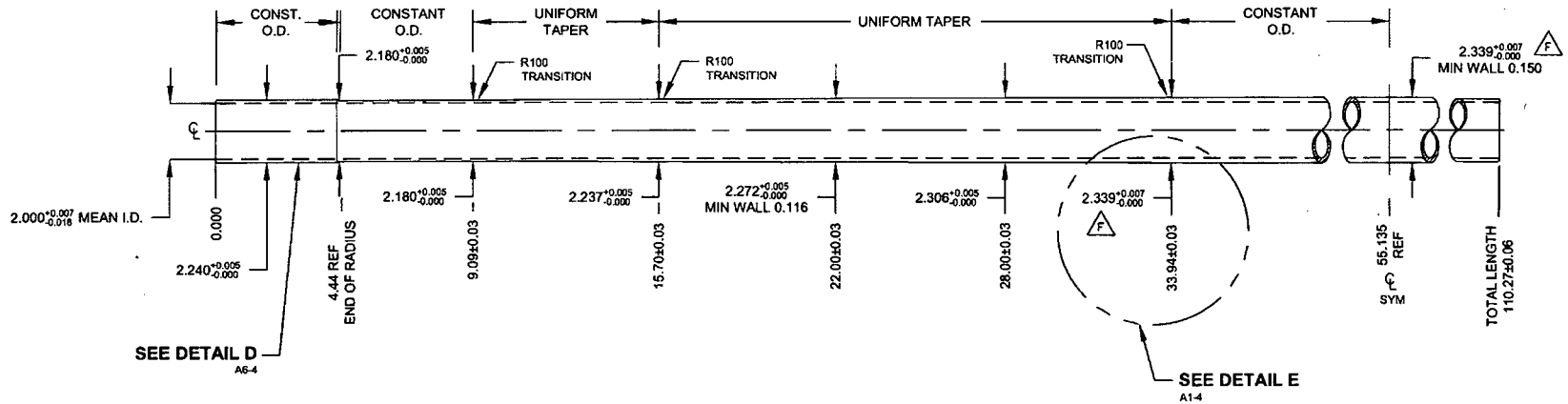


**D350-748-141TRN**
**TURNING DETAIL**

w/o 68520

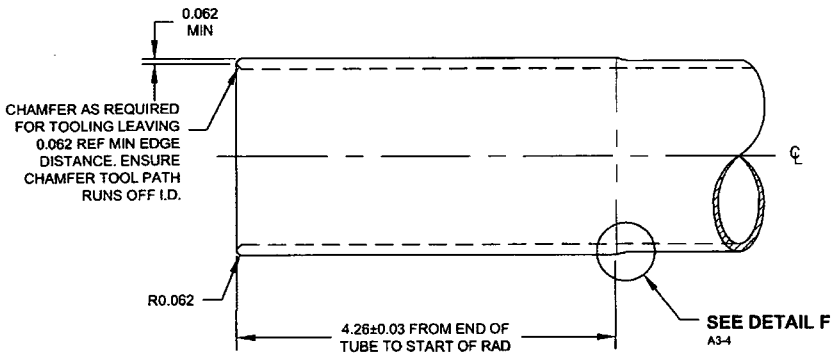


**DETAIL D:**
**CROSSTUBE CUFF** C7-4
SCALE 3X

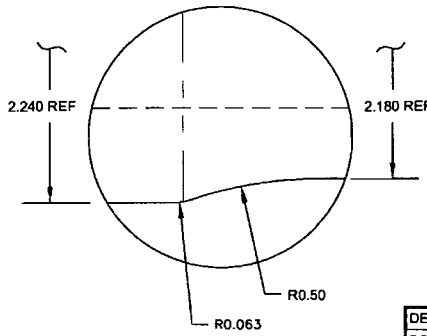


**DETAIL F:**
**CUFF TRANSITION** A5-4
NOT TO SCALE

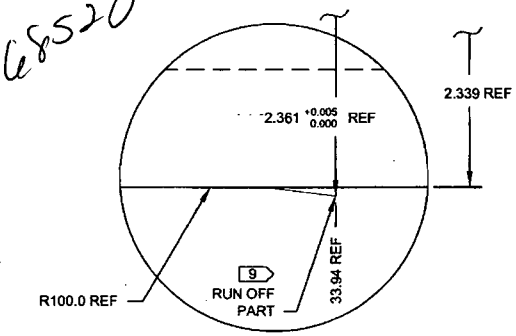


RELEASED
2011 -01- 18

**DETAIL E:**
**TAPER RUN-OFF** C3-4
NOT TO SCALE

| | | | |
|---|---|---|---|
| DESIGN | | **DART AEROSPACE LTD** HAWKESBURY, ONTARIO, CANADA | |
| DRAWN | | | |
| CHECKED | | DRAWING NO. | REV. F |
| MFG. APPR. | | D350-748-141 | SHEET 4 OF 4 |
| APPROVED | | TITLE | SCALE |
| DE APPR. | | CROSSTUBE (AS 350/355 HI FWD) | NTS |
| DATE | 10.11.23 | | |

COPYRIGHT © 2006 BY DART AEROSPACE LTD
THIS DOCUMENT IS PRIVATE AND CONFIDENTIAL AND IS SUPPLIED ON THE EXPRESS CONDITION THAT IT IS NOT TO BE USED FOR ANY PURPOSE OR COPIED OR COMMUNICATED TO ANY OTHER PERSON WITHOUT WRITTEN PERMISSION FROM DART AEROSPACE LTD

Dart Aerospace Ltd

| W/O: | | WORK ORDER CHANGES | | | | | |
|---|---|---|---|---|---|---|---|
| DATE | STEP | PROCEDURE CHANGE | By | Date | Qty | Approval Chief Eng / Prod Mgr | Approval QC Inspector |
| | | | | | | | |
| | | | | | | | |

**Part No:** _____ **PAR #:** _____ **Fault Category:** _____ **NCR:** Yes No **DQA:** _____ **Date:** _____

**Resolution:** _____ **Disposition:** _____ **QA: N/C Closed:** _____ **Date:** _____

| NCR: | | WORK ORDER NON-CONFORMANCE (NCR) | | | | | | |
|---|---|---|---|---|---|---|---|---|
| DATE | STEP | Description of NC Section A | Corrective Action Section B | | | Verification Section C | Approval Chief Eng | Approval QC Inspector |
| | | | Initial Chief Eng | Action Description Chief Eng | Sign & Date | | | |
| | | | | | | | | |
| | | | | | | | | |
| | | | | | | | | |

**NOTE:** Date & initial all entries

## Eric Downing

**From:** David Shepherd <dshepherd@dartaero.com>
**Sent:** August 3, 2011 4:36 PM
**To:** 'Eric Downing'
**Cc:** 'Bill Beckett'; 'Mike Petsche'; 'L Lacelle'; 'Susanne Sheldon (Susanne Sheldon)'; 'Chris Provencal'
**Subject:** RE: 350 cross tubes out of tol.

Eric,

Not sure what to tell you ... I think this is a scrap tube ... It is already 0.33" narrower than nominal ... If we trim it to make it level, it will be close to 0.50" narrower than nominal ... Compounded with the fact that is twisted by almost 0.50" ... With everything that is wrong with this tube, I don't think Chris would accept it either ... It's going to be tough for a customer to get everything to line up and he will have to pre-stress the gear quite a bit to get it together. Please scrap the tube, or set it aside for development testing.

Thanks,
David

---

**From:** Eric Downing [mailto:edowning@dartaero.com]
**Sent:** August-03-11 2:10 PM
**To:** 'David Shepherd'
**Cc:** 'Bill Beckett'; 'Mike Petsche'; 'L Lacelle'; 'Susanne Sheldon (Susanne Sheldon)'
**Subject:** RE: 350 cross tubes out of tol.

David

Sorry about that David I didn't see it was missing a batch #. The # is 72502. I re attached the dim sheet with the correct Batch # on it.
For tube B68520 could we cut it to the correct height and span and from talking to Dan Paquette he has told me that Chris has approved that high of a twist before. I'll look tomorrow to make sure we have in the past. But I know that we are up against the wall( as Bill would say) to try to get as many tubes as possible sent out for Cad plating so if it could be saved it would be much appreciated. But if it can't it can't then it should be scraped.

Downing

---

**From:** David Shepherd [mailto:dshepherd@dartaero.com]
**Sent:** August 3, 2011 3:58 PM
**To:** 'Eric Downing'
**Cc:** 'Bill Beckett'; Mike Petsche; 'L Lacelle'; 'Susanne Sheldon (Susanne Sheldon)'
**Subject:** FW: 350 cross tubes out of tol.

Eric,

B68519 is acceptable
B????? is acceptable (please add a B/N to inspection sheet)

B68520 is badly twisted and has height/spread difference from side-to-side of 0.25" so I think it should be scrapped.

David

**From:** Eric Downing [mailto:edowning@dartaero.com]
**Sent:** August-03-11 1:37 PM
**To:** 'David Shepherd'; 'Mike Petsche'
**Cc:** Bill Beckett; Linda Lacelle; Susanne Sheldon
**Subject:** 350 cross tubes out of tol.

Hey David
I have Qty 3 cross tubes that are out of tolerance and need to be approved by you. I have scanned the dim sheets and attached them to the email. I need an answer ASAP to be able to put them in the oven to get the stress relief done.
Thanks

**Eric Downing**
**QC COORDINATOR**
**DART AEROSPACE**
**EDOWNING@DARTAERO.COM**

| DART AEROSPACE LTD | Work Order: | |
|---|---|---|
| | | |
| **Description:** Crosstube High Fwd (AS350/355) | **Part Number:** | **D350-748-101** |
| | | |
| **Inspection Dwg:** D350-748-141 **Rev:** E | | **Page 1 of 1** |

| Required Dimension | Min | Max |
|---|---|---|
| Height | 23.13 | 23.37 |
| 1/2 Span | 40.78 | 41.02 |
| Angle | 75 | 77 |
| Total Span | 81.56 | 82.04 |

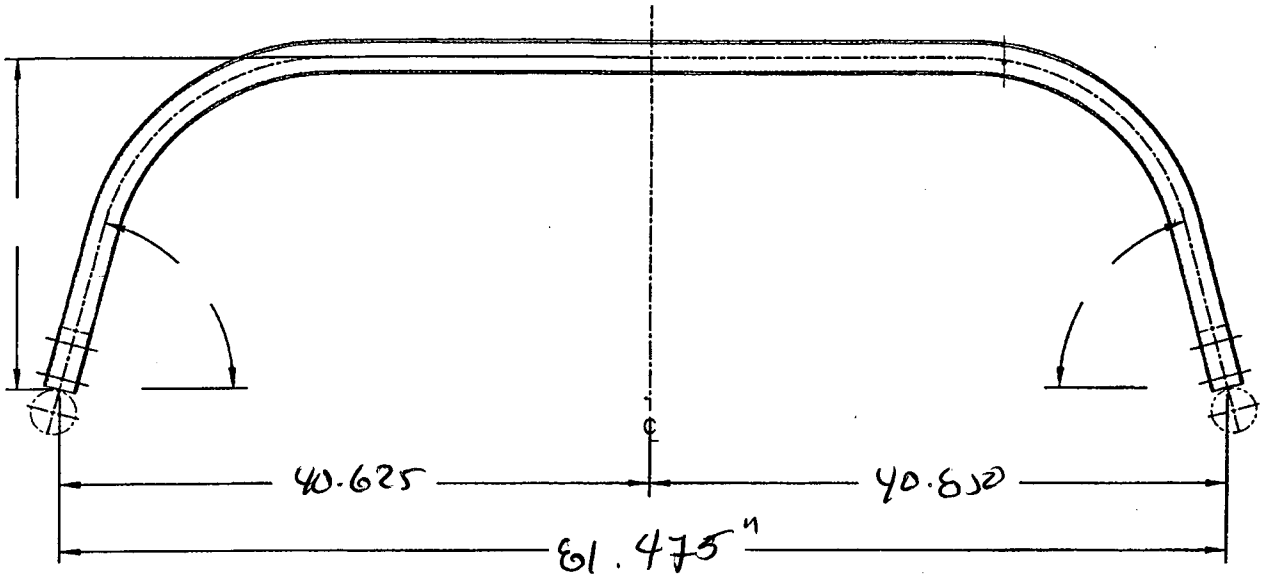


| Comments |
|---|
| Twist = 0465 |
| |
| |
| |

| | |
|---|---|
| QC15 Inspection | |
| Date | |

| Rev | Date | Change | Revised by | Approved |
|---|---|---|---|---|
| A | 07.02.06 | New Issue | KJ/JM | |
| B | 10.08.23 | Dwg Rev updated | KJ | 2023-08-23 |